4L80E Automatic Transmission V 20.0

File Name: 4L80E Wiring Diagram TPS Ver 20.0
Harness Required: G11 & G10
Last Changed: 09/09/2010

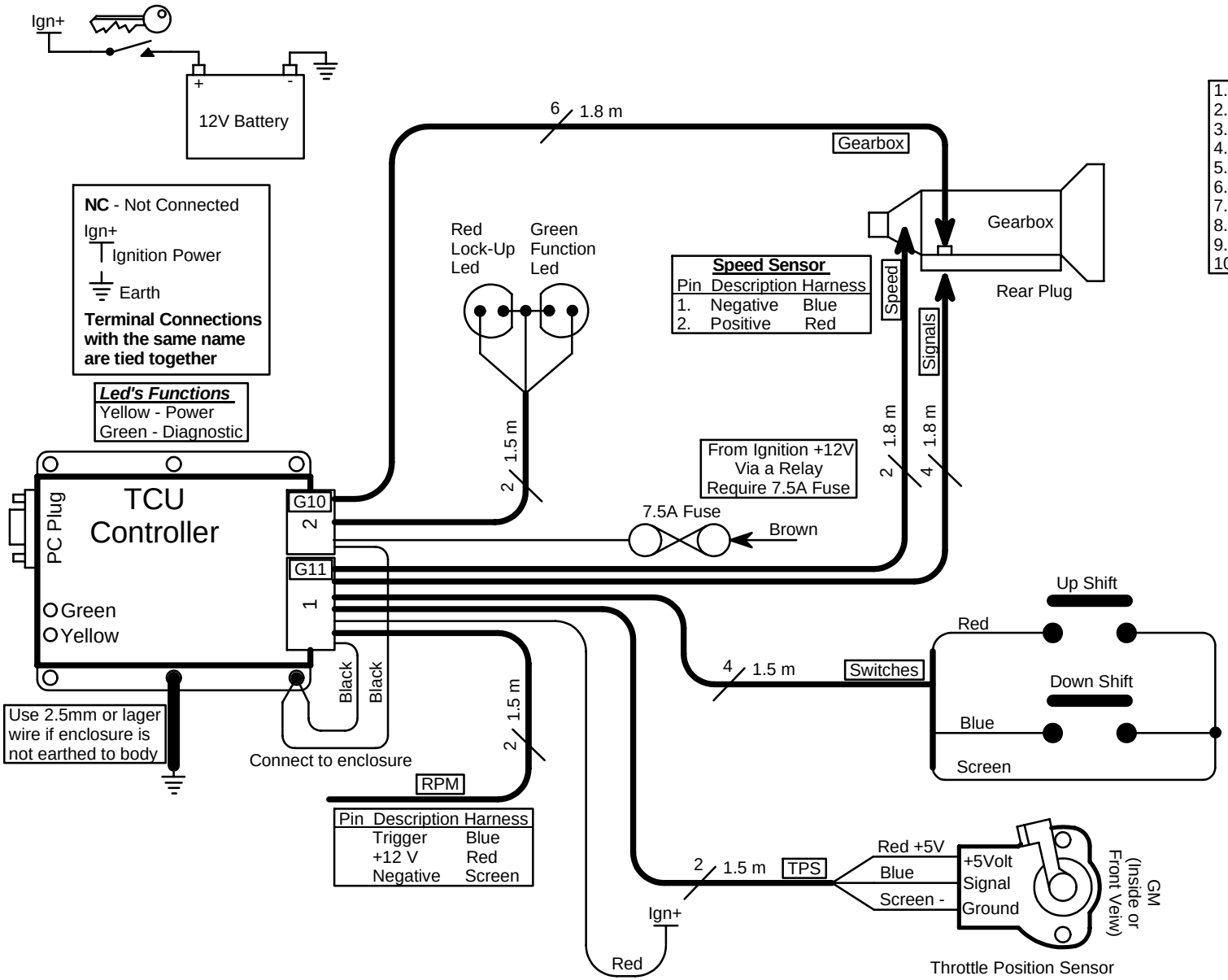

NC - Not Connected
Ign+ Ignition Power
Earth
Terminal Connections with the same name are tied together

Led's Functions
Yellow - Power
Green - Diagnostic

Speed Sensor

Pin	Description	Harness
1.	Negative	Blue
2.	Positive	Red

Pin	Description	Harness
	Trigger	Blue
	+12 V	Red
	Negative	Screen

2

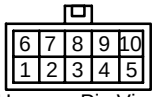

Harness Pin View

1. Blue	
2. White	
3. Red	Gearbox
4. NC	
5. Blue	Green Mode LED +
6. Green	Gearbox
7. Black	Gearbox
8. Yellow	Gearbox
9. Brown	+12V Relay Supply
10. Red	Red Lock-Up LED +

1

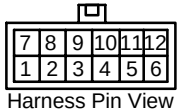

Harness Pin View

1.	Blue	Down Shift Button
2.	Blue	TPS Signal 0V to 5V
3.	Green	Signals
4.	Yellow	Signals
5.	NC	
6.	Blue	RPM Pulse
7.	Red	Up Shift Button
8.	Red	Signals
9.	Red	+5V Out
10.	Red	+12V Supply In
11.	Red	Speed Sensor
12.	NC	

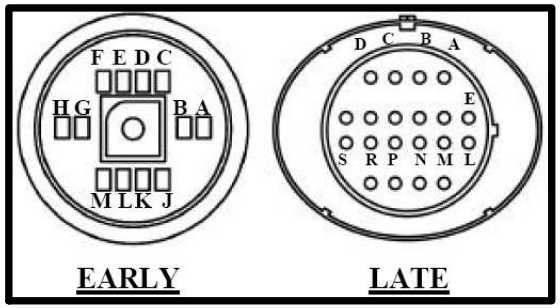

Harness Conector Pin View

Pin Number		Harness + Color	Resistance
Early - Late			Cold Hot
A	A	Gearbox Red	20 - 40
B	B	Gearbox Yellow	20 - 40
C&K	E	Ground	
D	N	Signals Red	
E	R	Signals Yellow	
F	P	Signals Green	
J	S	Gearbox Green	11 - 17
L	D	Ground	
M	C	Gearbox Black	3.5 - 4.6